International Engineering Research Journal

Exhaust Gas Heat UtilizationTo Keep Food Delivery Item Warm

Nilesh B. Sanap†, Dr. D. M. Mate‡, Prof. S. D. Kathwate†

†M.E. (HPE) IV Semester Student, Mechanical Engineering, SavitribaiPhule Pune University, GHRCEM, Ahmednagar, Maharashtra, India.
‡Professor, Mechanical Engineering Department, SavitribaiPhule Pune University, NMIET, Pune, Maharashtra, India.
†Professor, Mechanical Engineering Department, SavitribaiPhule Pune University, GHRCEM, Ahmednagar, Maharashtra, India.

Abstract

In this area, the rate of online food delivery item is increased very rapidly. The food item which is to be delivered to customer requires at least 15 to 20 minutes from the time of making. Meanwhile the food item gets cooled and so as it loses its quality. The present innovation tackles this problem by providing an arrangement which will keep the food item warm up to the time of delivery. The basic principle of working for this arrangement is transferring heat energy of waste exhaust gas, which is any ways going waste to the food chamber which will maintain the food temperature and also reduces the heat from exhaust. This innovation will be useful mainly for the online food delivery.This can be also use to transfer food from one place to another without losing its quality.

Keywords:*Conduction , Convection , Heat Transfer , Delivery Box , Pressure drop , Insulation , Temperature Measurement on Copper Sheet , Thermocouple .*

1. Introduction

Now a days, the food items like Pizza, Burger etc has beenorderedonline . But to deliver the ordered food item requires time of about 20-25 minutes. Meanwhile the food items get cooled and lose its taste. So either customer needs to heat it or to eat as it is. To avoid this loss of food quality, some arrangement should be made which will solve this problem(Rial et al, 2012). If the delivered food is warm then customer gets more satisfaction and this will attract more customers to order online food which will ultimately increases the business. Keeping this need in mind a device which will solve this problem is to be made. We have two main options either make more effective insulated box which will restrict the heat transfer or some device which will maintain the temperature of that box at desired temperature. To make an arrangement which will keep ordered food warm till it reaches the customer. Now the aim is to design an arrangement which will keep the temperature of box to required value. All the available boxes are only acts as an insulation box. There is no such a device which will maintain the temperature of food item till the time of delivery(Ornektekin et al, 1998).With two-wheeler, we are available with considerably large amount of exhaust gas heat which anyways gets waste. We can utilize this heat from Exhaust Gas to keep food deliveryitems warm. So the exhaust gas should be circulated around the box and thus temperature can be maintained.

From 1940's pizza delivery was done with the pizza sitting on a round cardboard base and covered with a paper bag. Innovations since have included various venting configurations; built-in holders for extra sauces; designs for easier recycling; perforated tops so wedge-shaped pieces of cardboard has been used as plates. Bags used to keep pizza hot while being transported are commonly referred as hot bags. These bags are made of vinyl, nylon that passively retains heat. Heated bags supply added heat through insertion of externally heated disks, electrical heating elements, or pellets heated by induction from electrically generated magnetic waves. Changes in delivery bag designs have allowed without the usage of a fixed box for bike delivery, such as a hard frame, back straps, and waterproofing. These systems proved to be cheaper, more efficient and faster to use. This will be give an objectives

1. To make use of available exhaust gas heat from delivery vehicle.
2. To utilize the exhaust heat to keep food item warm .
3. To build an economical system so that it should be convenient to implement

3. Experimental Setup

Fig. shows the schematic diagram of the experimental system. The project setup works on the basic concepts of heat transfer, where the heat from the exhaust gas of delivery vehicle is carried through the pipe to heating chamber and then it is convected to the food chamber and so the inside box temperature is maintained

2. Project Overview

1.Delivery Box 2.Connecting Pipe
3.Copper Sheet 4.Baffles
5.Insulation Material 6.Pipe Clamps .
7.Inlet & Outlet Port 8. Aesthetics

Fig.1 Schematic diagram of the experimental apparatus**.**

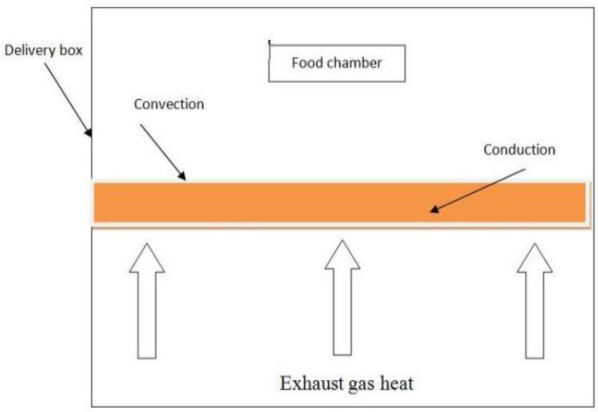

Fig.2 Schematic diagram of Conduction, Convection Heat Transfer

The conventional delivery box is modified by adding baffles andcopper sheet at bottom side. There are two chambers, one is heating chamber and another is food chamber. The chamber is separated by using copper plate. Copper plate is fixed to the delivery box wall with help of adhesive material and it is made air tight so that there should not be any leakage of exhaust gas from bottom chamber.

Model of Delivery Box

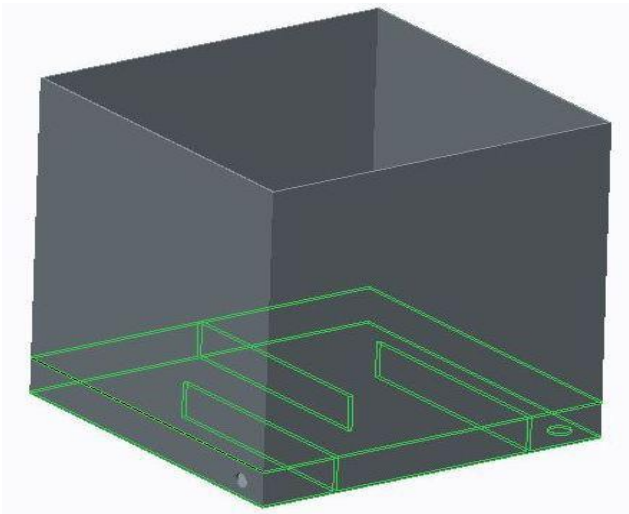

Fig. 3 Model of Delivery Box

Manufacturing is crucial stage for obtaining the desired results. Manufacturing should be done accurately as per the design. The manufacturing process selection is also one of major part. The manufacturing of project "Food delivery box to keep food delivery items warm" mainly divided into six parts namely:

Experimental procedure

In delivery box ,the bottom chamber consists of baffles which are provided to guide the flow of exhaust gas in zigzag fashion. The baffles are spaced equidistance from the centre of the box. It is placed perpendicular to bottom surface. The inlet and outlet port is provided on the bottom side. Pipe connector is fixed at inlet so that pipe should fix on it properly. Outlet port is having bend pipe connector so that the exhaust gas should be released into the atmosphere. The connecting pipe is insulated with the help of insulated foam and also the delivery box is insulated with an insulation sheet which is provided at bottom surface of box to reduce the heat transfer from bottom chamber.The exhaust gas from the muffler is carried to the heating chamber with help of connecting pipe. The pipe is connected to the inlet connector. The exhaust gas has entered into the heating chamber then is allowed to pass in zigzag manner with the help of baffles. With the help of baffles the heat from the exhaust gas is conducted to the copper plate and then it is convected to the food chamber.

Firstly Clean the delivery box properly and then attach the connecting pipe from muffler to delivery box properly. Now, mark the centre location where the temperature is to be measured. Place the thermocouple tip at the marked location with help of cello tape. Let**,** ensure that the thermocouple is in contact with the copper plate. Place thermocouple inside the box to measure inside box temperature. Place one thermometer at the outlet of delivery box. Switch on the display of thermocouple setup. Start the

vehicle and note down the readings after specific time interval.

3.1 Material Selection

3.3.1 Box material is taken as FRP.

Properties of Copper	Specification
Thermal conductivity	0.35 W/mk
Density	0.96 gm/cc.

Table 3.3.1 Properties of FRP

3.3.2 Heat transfer medium

For transferring heat from bottom chamber to food chamber some conducting medium is required. Also copper has high thermal conductivity so copper is selected as heat transfer medium. Moreover copper has least effect of corrosion due to exhaust gas.

Properties of Copper	Specification
Relative Density	8.96
Thermal Expansion	16.5 µm/m k (at 25 °C)
Thermal Conductivity	385 W/m k
Melting Point	1083°C

Table 3.3.2 Properties of Copper

3.3.3. Insulating material

For insulation of heat pipe, insulated foam is used. Insulated foam has following properties-

Properties of Insulating foam	Specification
Thermal Conductivity	0.02 W/m k
Density	6 Kg/m^3

Table 3.3.3 Properties of Insulating foam

3.3.4. Connecting pipe

For carrying the exhaust gas from the muffler to the delivery box a connecting pipe is required. The exhaust gas has high temperature so pipe should be such that it should sustain high temperature. Silicon breaded pipe has heat resistance up to 200°C. The pipe is flexible so it can adjust itself while driving bumps occurs.

Properties of Silicon Breaded pipe	Specification
Thermal Conductivity	0.2 W/m k
Density	6 Kg/m^3

Table 3.3.4 Properties of silicon pipe

4. Design Calculation

Box Design

The box is predesigned as the standard dimensions for the box is defined the manufactures.

Dimensions of box = 17 * 17 *17 inches.

Mass of air inside the box = Volume of box (V) ×*Density of air (ρ_{air}) ... (1)

We have, temperature of pizza at the time of keeping it in the box is about 70 ^{0}C.

So we have to maintain air temperature inside the box about 50 ^{0}C to 55 ^{0}C to keep the pizza at that temperature

∴ Heat required to raise the temperature of air inside the box

$= m_a * C_{pa} * \Delta T$ ... (2)

Some of this heat is given by pizza by radiation.

∴ Heat transferred by radiation should be considered

Consider emissivity (ε) of pizza is 0.9.

$Q = \varepsilon * \sigma * A * (T_1^4 - T_2^4)$ ... (3)

Pizza radiates 8.98 Joules/sec at the moment when it kept inside the box and the radiation goes on decreasing as its temperature goes on decreasing. At a point where the temperature of pizza and the temperature of air inside the box will be same then the radiation will be zero.

We have let inside temp of air is 55 ^{0}C.

∴ Heat lost through one wall to atmosphere

$Q=\frac{dT}{\frac{1}{A*hi}+\frac{x}{A*kf\,r}+\frac{x}{A*kin}+\frac{1}{A*ho}}$ ....(4)

Now we have h inside for natural convection

So thermal expansion=

$\beta=\frac{1}{T}$ .....(5)

Grashoff's Number (Gr) = $\frac{(L)^3*g*\beta*\Delta T}{v^2}$

$10^4<Gr*Pr<10^9$ ....For Laminar

$Gr*Pr>10^9$ ....For Turbulance

Hence the flow is laminar.

From the data book, for Laminar flow,

$H_{inside}=1.42*(\frac{\Delta T}{L})^{0.28}$ .....(6)

Consider while driving the vehicle the air velocity becomes 10 m/sec

Reynolds number= $\frac{\rho*v*L}{\square}$ ....(7)

We have criteria,

$Re < 5 * 10^5$ ...For Laminar flow

Now taking condition of constant wall temperature

$Nu= 0.332 * Re^{0.5} *Pr^{0.333}$ ... (8)

∴ $h =\frac{Nu*k}{x}$ ... (9)

This is the heat lost per second through the box. After the box air temperature reaches to 55 ^{0}C.

Now we have to make up this heat with the help of heat of exhaust gas of delivery vehicle.

Find mass flow rate of exhaust gas.

Velocity of exhaust gas through muffler= 8.13 m/sec

Area = $\frac{\pi}{4}*d_p^2$

=

Flow rate = A * V ... (10)

∴mass (m)=ρ_g * Q ... (11)

Now we have to calculate loss of heat through connecting pipe

Thermal Conductivity of silicon breaded pipe at 100^0C is about 0.2 to 0.3 W/mK

We have to calculate heat lost through pipe

$$Q = \frac{2\pi L\Delta T}{\frac{1}{hi*r1}+\frac{ln\frac{r0}{r1}}{k}+\frac{1}{ho*ro}}$$

We have to calculate the inside heat transfer coefficient of pipe h_i.

∴ Nu = 0.023 × (Re) $^{0.8}$ × (Pr) $^{0.4}$ ... (12)

$$h_i = \frac{Nu*k}{D}$$

Now we have to calculate outside heat transfer coefficient of tube

$$Re = \frac{V*D}{v} \quad ... (13)$$

$$Nu = C * Re^m * Pr^n * \left(\frac{Pr\wedge\infty}{Prw}\right)^{0.25} \quad ... (14)$$

Now,

$$h_o = \frac{K}{D} * Nu$$

$$Q = \frac{2\pi L\Delta T}{\frac{1}{hi*r1}+\frac{ln\frac{r0}{r1}}{k}+\frac{1}{ho*ro}}$$

$$\text{Heat loss} = \frac{2\pi L\Delta T}{\frac{1}{hi*r1}+\frac{ln\frac{r0}{r1}}{k}+\frac{1}{ho*ro}}$$

Now we have,

Temperature of exhaust gas at entry of the delivery box,

Q = m_{eg} * C_{pg} *ΔT

Assumptions-

- Velocity remains constant from entry to exit of delivery box.
- Temperature of gas remains constant through chamber.

Now,

$$\text{Reynolds number} = \frac{\rho*V*L}{\mu}$$

For wall, Re < 5 * 10^5 ... Laminar Flow

$$h = \frac{Nu*k}{D}$$

We have condition, Gr * Pr< 10^9 ... For Laminar flow

Hence for Laminar flow and constant wall temperature,

Nux = 0.508 * $Pr^{0.5}$ * $Gr^{0.25}$ ... (15)

$$h = \frac{Nu*K}{L}$$

Determine the thickness of copper sheet.

∴ Thickness of plate

$$Q = \frac{A*dT}{\frac{1}{hi}+\frac{x}{ka}+\frac{1}{ho}}$$

Thus the plate of thickness is to be calculated.

5. Result Analysis

After manufacturing, we need to verify the various working parameter with will ultimately affect the performance of setup. The temperature distribution on copper plate is the most critical parameter for performance of setup. The setup also greatly affects the back pressure on engine and so reduces the efficiency of engine. For reducing these losses and optimization of set up we need to find out current results with the help of various testing. Hence, we need to carry out tests to determine the variation from designed results.

Time	T1	T2	T3	T4	T5
5	38	37	38	45	32
10	40	38	39	47	34
15	45	43	44	55	37
20	47	46	47	57	39
25	50	49	49	60	42
30	54	51	53	65	44

Conclusions

The pressure drop due to set up results in drop in engine efficiency which is considerable. Adding the set up increases the fuel consumption but this gives the customer quality food which will increase the customer satisfaction. Increase in fuel consumption can be reduced up to certain limit by providing the exhaust fan at outlet. Addition of exhaust fan to setup results in reducing the fuel consumption about 50 % than that of without fan. There is heat loss from silicon pipe which can be minimize by changing material.The set up performance is well when the vehicle is running continuously. But when the vehicle stops and again started after some time, it takes about 15 minutes to reach the desired temperature. There is variation of temperature on copper sheet from inlet to outlet; this affects the heat transfer coefficient. Thus the plate thickness has more importance as it is required to have optimization of strength of plate and heat transfer coefficient.

References

Kothandaraman, C.P., Subramanyan, S., "Heat and Mass Transfer Data Book, Seventh Edition," (New Age International Publishers, 2012), ISBN: 978-81-224-3123-0 , Pp. 474-482

Ornektekin, S., "Effect of exhaust gas on corrosion of metals," International Journal of Environmental Studies, Volume 55, Issue 3, 1998, doi: 10.1080/00207239808711177

Mr. Krishna Asawa, Prof. VaibhavDighe, Use of exhaust gas heat to keep food delivery item warm, Vol-2 Issue-3 2016 IJARIIE-ISSN(O)-2395-4396

Pradip G. Karale , Dr. J. A. Hole ,Waste Heat Recovery from Engine Exhaust by using Heat Wheel, e-ISSN: 2278-1684,p-ISSN: 2320-334X, Pp 84-87,2015

Er. R. K. Rajput., "Heat and mass transfer, Fifth edition," (S. Chand Technical,2012), 1-24,ISBN: 81-219-2617-3 , Pp. 329-347 .

Koehler, WJ Tegethoff, D Westphalen, M Sonnekalb. *Absorption refrigeration system for mobile applications utilizing exhaust gases*, Heat and Mass Transfer,Volume 32, Number 5, June 1997.

J Vásquez, MA Sanz-Bobi, R Palacios, A Arenas. *State of the Art of Thermoelectric Generators Based on Heat Recovered from the Exhaust Gases of Automobiles*

S.J. James, C. James and J.A. Evans.Modelling of food transportation systems – a review. International

Rial, J. A., "Food-warming arrangement for a food-delivery motorized vehicle," European Patent 0, 628, 277, A1, June 1, 1994 , Pp. 91-102 .

Rial, J. A., "Food-warming arrangement for a food delivering motor vehicle," European Patent EP0, 781, 687, A2, December 24, 1996 , Pp. 23-38 .

Wikipedia, "Pizza delivery," http://en.wikipedia.org/wiki/Pizza_delivery, accessed Jan 2015.

Wikipedia, "Meals on wheels," http://en.wikipedia.org/wiki/Meals_on_Wheels, accessed Nov 2014.

"Thermal Conductivity of some common Materials and Gases," http://www.engineeringtoolbox.com/thermal-conductivity-d_429.html, accessed Jan 2015

Manufacturing process, "Hand lay molding," http://www.moldedfiberglass.com/ processes/open-molding-process, accessed Feb 2015

Wikipedia, "Fibre Reinforced Plastic." http://en.wikipedia.org/wiki/Fibre-reinforced_plastic, accessed Feb 2015

"Thermal Conductivity Characterization of FRP Composites:Experimental", http://www.4spe.org/Resources/resource.aspx?ItemNumber=9163, accessed Nov 2014 , Pp. 225-231 .